SAND82-1944
Unlimited Release
Printed December 1982

Distribution
TID UC-94

A USER'S MANUAL FOR THE CAVERN WELL HYDRAULICS CODE, PIPWEL

A. J. Russo

ABSTRACT

Both the solution mining operation used to produce storage space for the Strategic Petroleum Reserve (SPR) and the transfer of oil into 'and out of the storage caverns are done through cavern wells. The variety of well configurations, flow processes and fluid levels encountered require a large number of calculations for proper design and operation of the SPR hydraulic system. A well hydraulics code PIPWEL has been developed to facilitate some of these calculations. PIPWEL calculates the wellhead pressures, casing-seat pressures or flow rates (given the pressures) for most SPR leaching or oil transfer operations. This report describes the equations used in PIPWBL and is a guide for its use.

TABLE OF CONTENTS

	Page
INTRODUCTION	1
THEORY	2
Flow Pressure Through Tubing	2
Flow Pressure Through Annulus	3
Wellhead Pressures	6
CODE DESCRIPTION	10
INPUT VARIABLES AND OPERATING PROCEDURE	16
SUMMARY	26
REFERENCES	27

LIST OF FIGURES

Figure		Page
1.	Geometry for Annular Flow	4
2.	Geometry for the Oil Fill or Withdraw Option	7
3.	Geometry for the Leach-Fill Option	9
4.	Parameter Definitions for a Two Well Leach-Fill Geometry	12
5.	Parameter Definitions for a Two Well Leach-Fill Geometry	13
6.	Parameter Definitions for a Two Well Leach Geometry	14
7a.	Interactive Dialogue for an Oil Fill Example	19
7b.	Computer Output for an Oil Fill Example	20
8.	A Sample-Rerun of an Oil Fill Example	22
9a.	A Leach-Fill Example Run From a Data File	23
9b.	A Leach-Fill Example Run From a Data File	24

LIST OF TABLES

Table		Page
1	Option Selection Table	16

NOMENCLATURE

CL	Coupling length for tubing (innermost concentric pipe)
CLO	Coupling length for hanging string (a concentric pipe containing the tubing)
d_1	Hydraulic diameter = D_2-D_c
d_2	Hydraulic diameter = D_2-D_1
D	Diameter
D_c	Outer diameter of a coupling
DI1	Inside diameter of tubing
D12	Inside diameter of the hanging string
D13	Inside diameter of the outer casing (a concentric pipe containing the tubing and hanging string)
DO1	Outside diameter of the tubing
DO2	Outside diameter of the hanging string
D1	Outside diameter of an inner concentric pipe
D2	Inside diameter. of an outer concentric pipe
f	Friction factor
H	Casing seat depth
HH	Tubing depth
HO	Oil layer thickness in the cavern
H1	Depth to the cavern roof
H2	Depth of the hanging string
IFW	An option selection index
IPIT	An option selection index
ITAR	An option selection index
IVIS	An option selection index
K	Hydraulic resistance

	Coupling hydraulic resistance
	Total hydraulic resistance
	Length of coupling
PCS	Casing seat pressure
	Pipe section length of the tubing
	Pipe section length of the hanging string
	pressure of an annular flow
P2	Pressure at the bottom of the hanging string
P3	Pressure at the bottom of the tubing
P4	pressure of the tubing
Q	Flow rate
	Flow rate in the outer
	Flow rate in the tubing
S	Specific gravity
SB	Specific gravity of brine
SO	Specific gravity of oil
SW	Specific gravity of water
T	Temperature
TB	Temperature of brine
TO	Temperature of oil
Tw	Temperature of water
VISB	Viscosity of brine
	Viscosity of oil
	Viscosity of water
	Pressure difference
	Absolute roughness of pipe walls
v	Viscosity

INTRODUCTION

The caverns used to store oil for the Strategic Petroleum Reserve are connected to the surface piping through one or more wells. Each well can contain up to three concentric pipe strings which carry oil, water and brine. Depending on the process being carried out (direct or reverse leaching, oil fill, oil withdrawal or leach-fill) different fluid-pipe path combinations will be used. Although the calculation of pressure drops in the pipe strings and at the cavern levels of interest is straightforward for any process, the number of combinations of processes and geometries make hand calculations tedious and impractical. A well hydraulics code, PIPWEL, has been developed to allow quick evaluation of-the desired well pressures. This document describes the formulas employed in PIPWEL and its use for the analysis of SPR flow processes. . .

THEORY

Flow Pressure Drop Through Tubing

The Darcy-Weisbach equation for pressure drop per unit length, ∇p, in a straight, uniform, long pipe is[1]

$$\nabla p = \frac{f \rho v^2}{2D} \tag{1}$$

where f is the friction factor, p the fluid density, v the average fluid velocity and D the pipe diameter. To be consistent with the units used in the SPR, Equation (1) may be written as

$$\nabla p = 1.1461 \times 10^{-5} \frac{f S Q^2}{D^5} \tag{2}$$

where ∇p = pressure drop per foot (psi/ft)

S = Specific gravity of the fluid

Q = Flow rate (BBL/day)

D = Inside pipe diameter (inches).

The friction factor, f, is iteratively calculated from the Colebrook-White relation[1]:

$$\frac{1}{\sqrt{f}} = -2 \log_{10} \left(\frac{\varepsilon/D}{3.7} + \frac{2.51}{Re \sqrt{f}} \right) \tag{3}$$

where ε is the absolute pipe roughness

and Re is the Reynolds Number based on diameter.

A typical value of pipe roughness for SPR piping is believed to be about 0.0016 inch, and this value was used in Equation (3) for all calculations. The Reynolds Number is given by

$$Re = 92.2 \frac{Q}{D\nu} \tag{4}$$

where the viscosity, ν, is in centistokes and other symbols are as previously defined.

Flow Pressure Drop Through Annulus

The flow pressure drop in the annular region of the concentric well piping is slightly more complicated than that for the tubing because the flow path is not uniform. Figure 1 shows a typical configuration where the couplings used to connect the inner tubing are seen to reduce the flow area in the annulus at the end of each pipe section.

The pressure drop in the annular region due to friction is also given by Equation (2) except that the diameter is replaced by an equivalent diameter, D_e, which is defined as*:

$$D_e = [(D_2-D_1)^3(D_2+D_1)^2]^{0.2} \tag{5}$$

where . . D_2 is the inner diameter of the outer casing and D_1 the outer diameter of the inner casing as shown in Figure 1.

The Reynolds Number to be used in the friction factor calculation (Equation 3) is

$$Re = 92.2 \frac{Q}{\nu\,(D_2+D_1)} \tag{6}$$

$D_2 - D_1$

and the diameter, D, in Equation 3 is replaced by

$$d = D_2-D_1 \tag{7}$$

D_c?

The coupling diameter, D_e, replaces D_1 in Equations (6) and (7) for the region over the coupling.

*The hydraulic diameter, $d = D_2-D_1$, may be written as $(D_2^2-D_1^2)/(D_2+D_1)$. Combining this with the substitution of Q/A for velocity in Equation (1) and reducing to the form of Equation (2) gives the form for the effective diameter, D_e, in Equation (5).

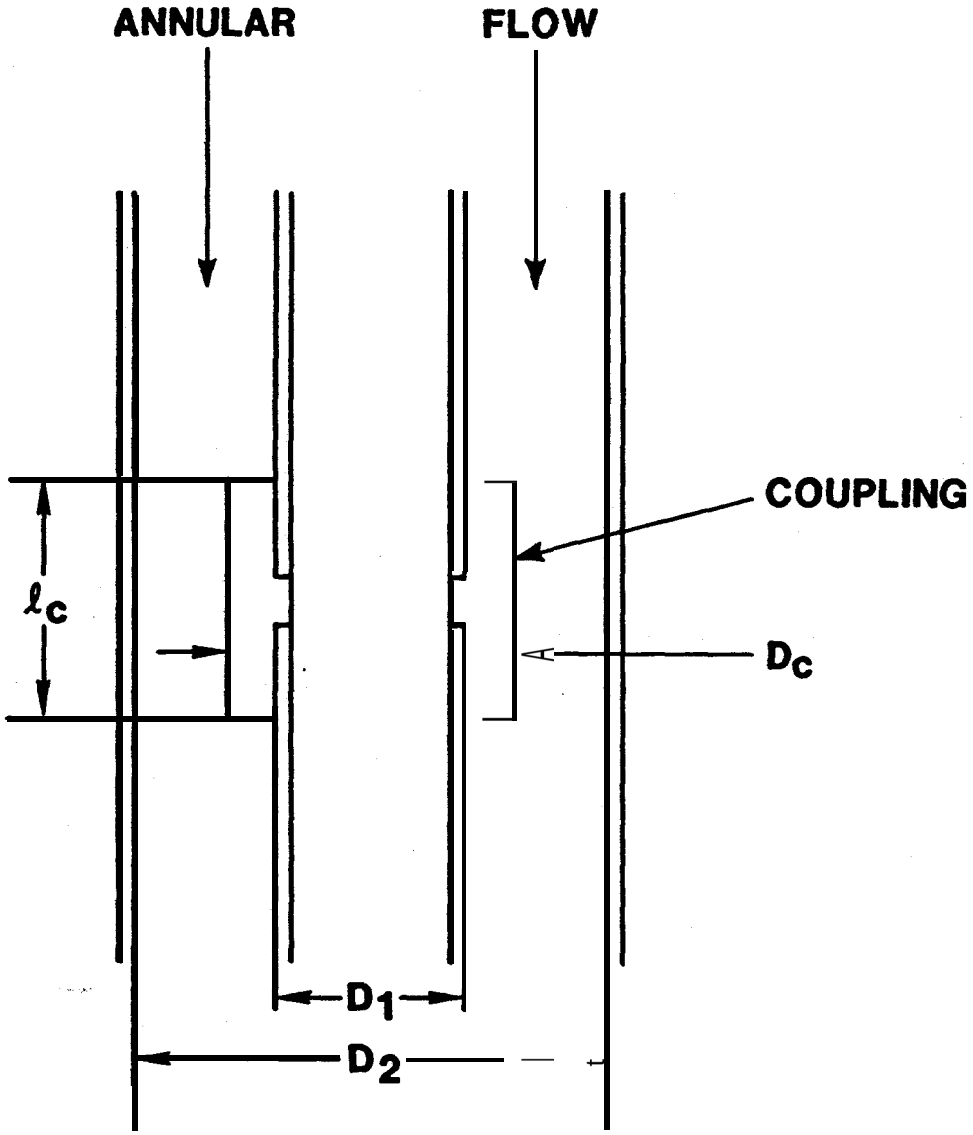

Figure 1. Geometry for Annular Flow

In addition to the friction pressure loss in-the annulus, there is pressure loss due to constriction and expansion of the flow around the coupling. The hydraulic resistance (also known as the loss coefficient), K, of a constriction is approximately[1,2]

$$K = 0.5\left(1 - \frac{d_1(D_2+D_c)}{d_2(D_2+D_1)}\right)$$

and for an expansion is

$$K = \left(1 - \frac{d_1(D_2+D_c)}{d_2(D_2+D_1)}\right)^2$$

where $d_1 = D_2 - D_c$

and $d_2 = D_2 - D_1$.

The hydraulic resistances of a coupling due to expansion and contraction are added to the hydraulic resistance due to friction, which is

$$K = \frac{f\ell_c}{d_1}$$

where ℓ_c is the length of the coupler, to obtain the coupling hydraulic resistance, K_c.

$$K_c = 0.5\left(1 - \frac{d_1(D_2+D_c)}{d_2(D_2+D_1)}\right) + \left(1 - \frac{d_1(D_2+D_c)}{d_2(D_2+D_1)}\right)^2 + \frac{f\ \ell_c}{d_1} \qquad (8)$$

All the coupling K_c values are summed to give K_T. The pressure drop across all the couplings, Δp, is then found from an alternate form of Darcy's law

$$\Delta p = \frac{9.562\text{x}10^{-7}\ K_T\ S\ Q^2}{(D_2{}^2 - D_c{}^2)} \qquad (9)$$

Replacement Page

Wellhead Pressures

After the flow pressure drops in the annuli and tubing have been calculated they must be combined with the static pressure changes due to depth and varying specific gravity to obtain the pressure at the wellhead and other points. For each option this procedure is slightly different, therefore a summary of the formulas used are given here.

Oil Fill

Referring to Figure 2 for symbol meanings

$$P3 = P4 + 0.433\ SB \cdot HH + APT \tag{10}$$

$$P2 = P3 - 0.433\ SB(HH-Hl-HO) - 0.433\ SO(HO+Hl-H2) \tag{11}$$

$$P1 = P2 - 0.433\ SO\ H2 + \Delta PA \tag{12}$$

$$PCS = P2 \tag{13}$$

where APT and ΔPA are the flow pressure drops in the tubing and annulus respectively and SO, SB and SW refer to specific gravities of oil, brine and water.

Oil Withdrawal

$$P2 = P1 + 0.433\ SO \cdot H2 + \Delta PA \tag{14}$$

$$P3 = P2 + 0.433\ (SO(HO+H1-H2) + SB(HH-Hl-HO)) \tag{15}$$

$$P4 = P3 - 0.433\ SW \cdot HH + APT \tag{16}$$

$$PCS = P2 \tag{17}$$

Oil Withdrawal With Brine Replacement

The equations are the same as (14) through (17) except SW in Equation (16) is replaced by SB and APT is evaluated using brine viscosity.

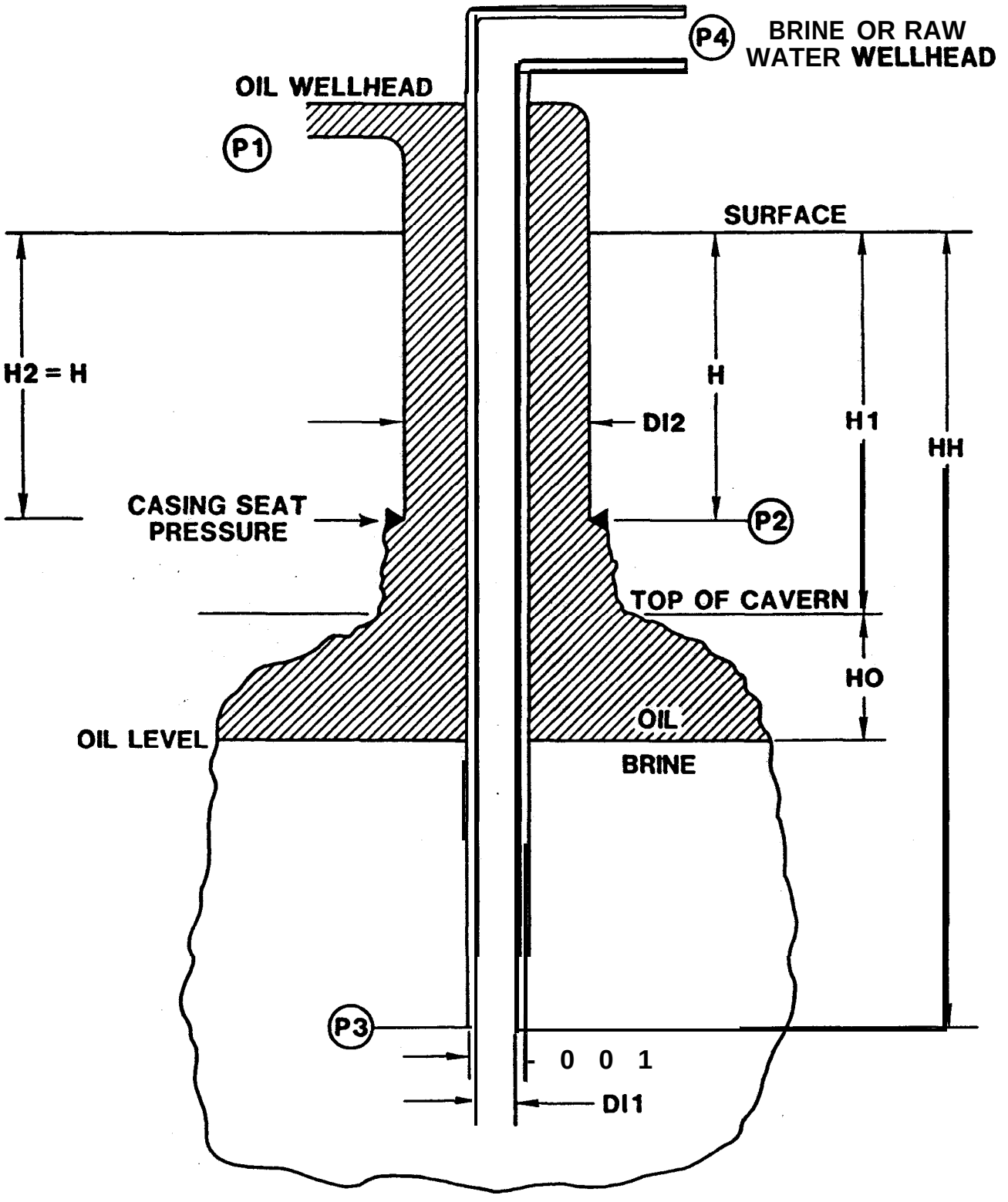

Figure 2. Geometry for the Oil Fill or Withdraw Option

Direct Leach

Referring to Figure 3 for symbol meanings, the equations are the same as (14) through (16) except SO is replaced by SB and ΔPA is evaluated using brine viscosity.

Equation 17 is replaced by

$$PCS = P2 - 0.433\ (SB(H2-H1-HO) + SO(H1+HO-H)) \qquad (17a)$$

Reverse Leach

Referring to Figure 3, the equations are the same as (10) through (12) and (17a) except that SO is replaced by SW everywhere but Equation (il) where it is replaced by SB. ΔPA is evaluated using water viscosity.

Leach-Fill

Referring to Figure 3, equations (10) through (13) are used (with appropriate diameters in Equations (5) through (9) for ΔPA) to evaluate the oil wellhead pressure. Then (10) through (12) and and (17a) are used, as indicated in Reverse-Leach above, to evaluate the water wellhead pressure.

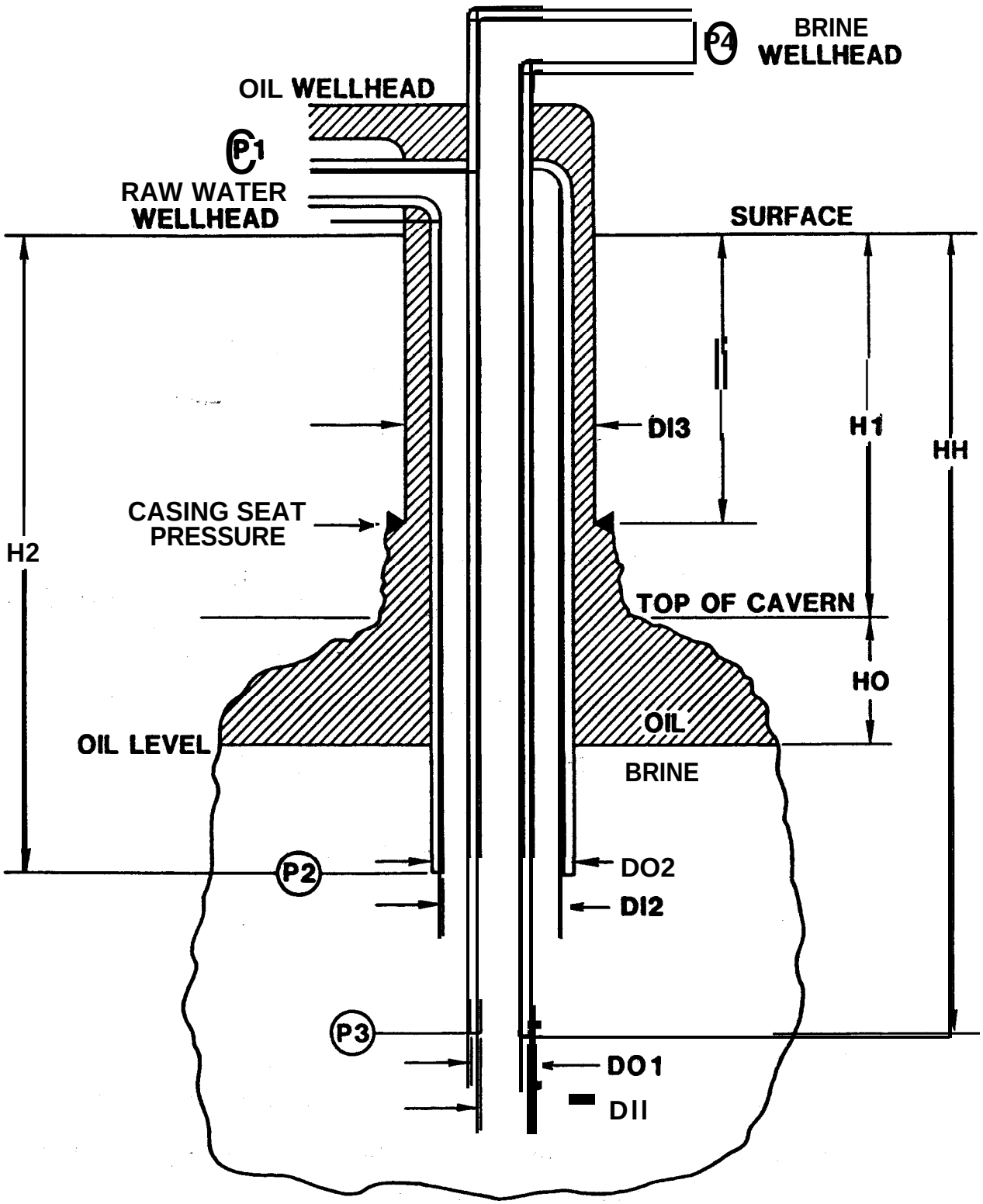

Figure 3. Geometry for the Leach-Fill Option

CODE DESCRIPTION

In order to handle a variety of flow geometries and well processes without a large number of input variables, the definition of some of the input variables is allowed to change, depending on the flow geometry and option selected.

Figure 2 shows the simplest configuration possible, that of the oil fill or withdrawal. An inner tube hangs to a depth HH inside a casing of length H2 which is cemented at the depth H (in this case H2 = H). The upper portion of the cavern is filled with oil to a distance HO below the cavern roof, which is at a depth of H1. The inner and outer tubing diameters are DI1 and DO1. In this case D12 is the inner diameter of the outer casing. In the fill mode the brine wellhead pressure P4 must be specified and for a specified flow rate the oil well head pressure P1 and casing seat pressure are calculated. In the withdrawal mode, P1 is specified and P4 is calculated.

For leaching processes the string configuration is usually similar to that depicted in Figure 3. An intermediate hanging string is introduced which carries the brine in direct leaching or raw water in reverse leaching. Since the outer casing, which is used to move the oil level, is usually dormant during the leaching process, the variables associated with it are not used or read in (except for the casing seat depth H). The parameters H2 and D12 now refer to the intermediate string. As before the pressure on the outlet side of the wellhead is specified and all other pressures are calculated.

The most complex option is the leach-fill mode also shown in Figure 3. In this case all three passages at the wellhead are active and values for DO2 and D13 must be supplied as input data. The code calculates the pressures in two stages. First the oil annulus and brine center brine string are treated, and then the raw water annulus and brine string are treated. The total brine production rate and oil flow rate must be specified with the brine well head pressure.

Several other configurations of interest, involving two separate wells into the same cavern, can be used. Figure 4 shows a leach-fill scheme in which the raw water is injected into one single string well and oil injection and brine outflow occur in a concentric pair *in* another well. By defining the input parameters as shown in the figure the code may be "tricked" into handling this case.

Similarly, Figure 5 shows the case of oil and water injection in one well string pair and brine production in another well. Simpler subcases exist where two wells with single pipe strings are used for leaching or oil transfer. Figure 6 shows the appropriate parameter definitions for the direct and reverse leaching cases. These also correspond to the two-well oil withdrawal and fill cases where the oil replaces the fluid in the pipe of length H2.

The ordinary mode of operation for any process or geometry is to specify the outlet wellhead pressure and flow rates at the wellhead and have the code calculate the pressures everywhere else. For the oil fill and withdraw and leach *only* modes another option is possible.

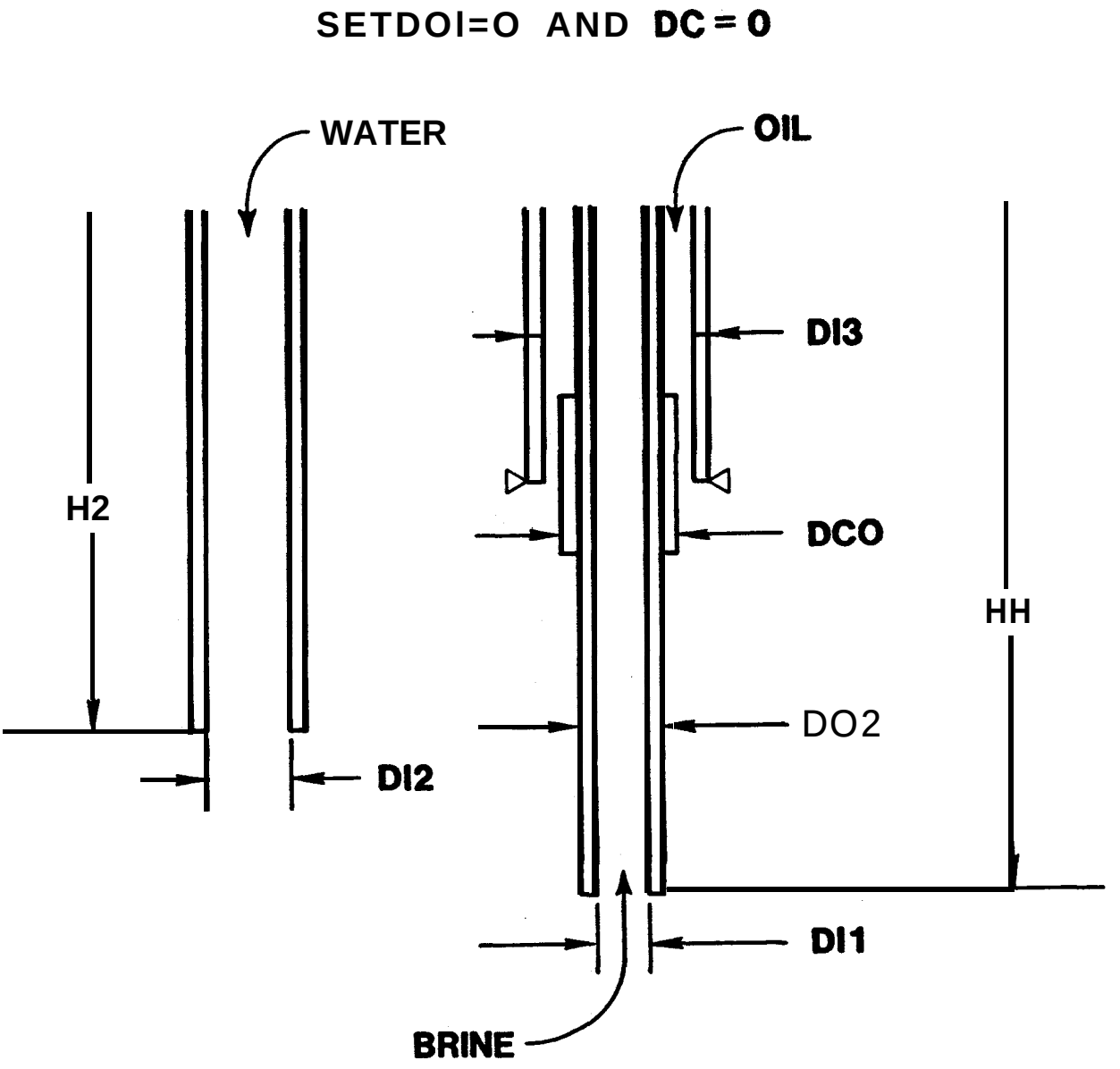

Figure 4. Parameter Definitions for a Two Well Leach-Fill Geometry

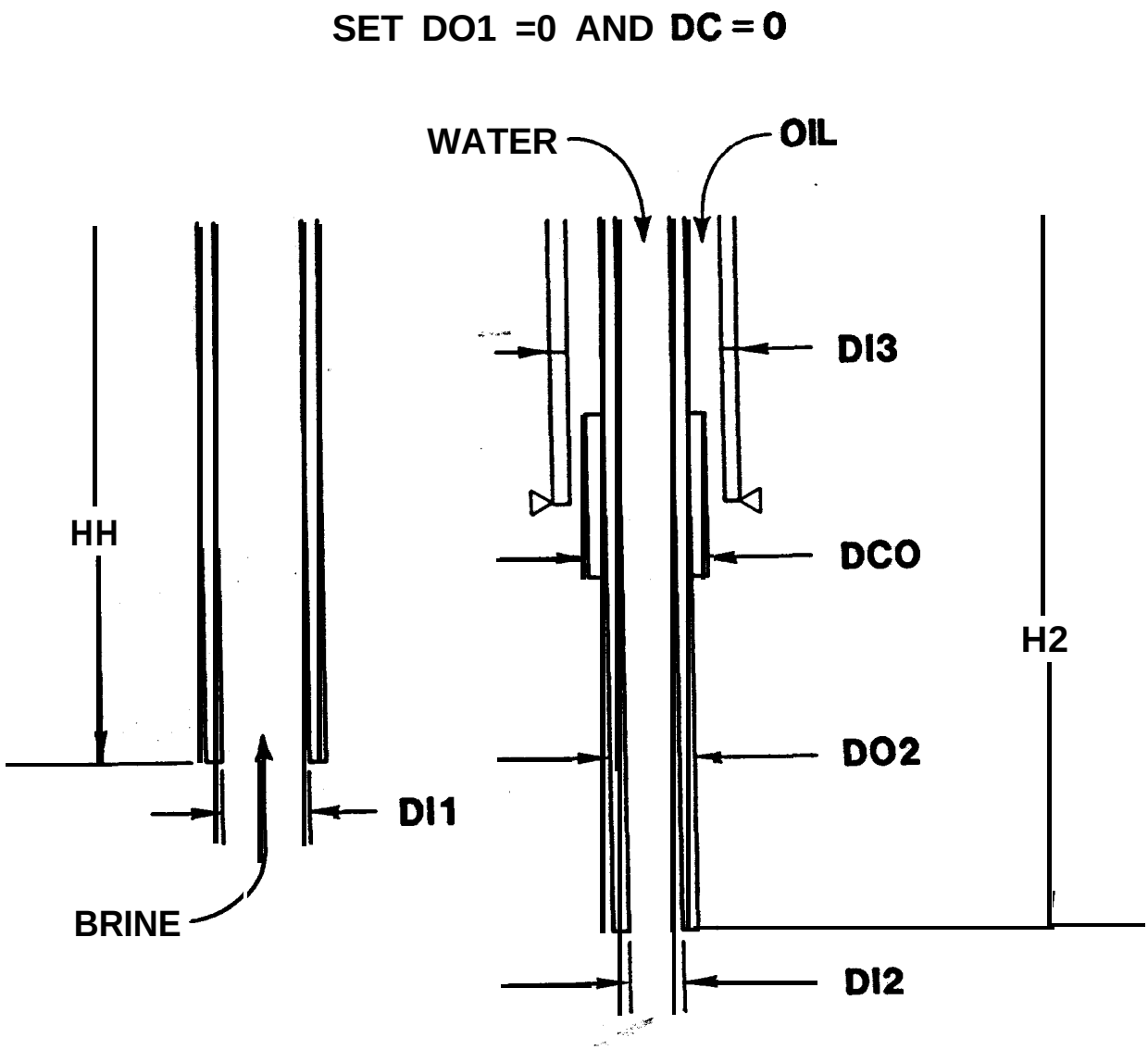

Figure 5. Parameter Definitions for a Two Well Leach-Fill Geometry

SET DO1 =0 AND DC = 0

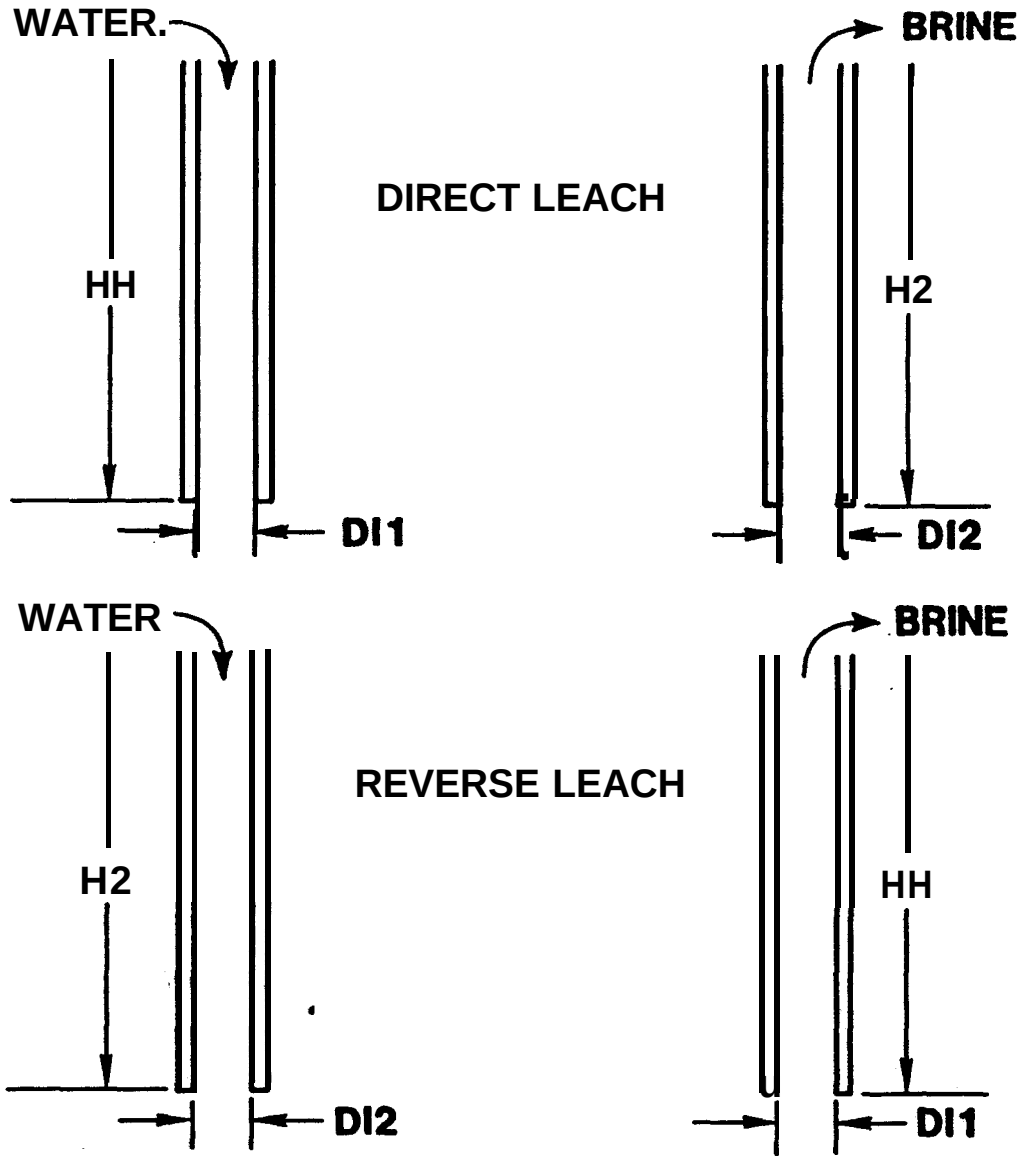

Figure 6. Parameter Definitions for a Two Well Leach Geometry

The pressures at the wellhead outlet and inlet may be specified and the flow rates which correspond to these pressures will be calculated if they are physically realizable for the option selected. This is accomplished with an internal iteration scheme which can usually match the desired pressures to within 0.1 percent.

The user also has the option of specifying the fluid viscosities, or accepting a default viscosity calculation of curve fitted data as follows:

For brine $v = 1.1\ S(80/T)^{.85}$ (18a)

For water $v = 1.1\ S(60/T)^{.85}$ (18b)

For oil $v = 50.0\ (40/T)^{1.218}$ (18c)

The temperatures, T, used in (18) are degrees F and are specified as input data. The viscosities are in centistokes. The viscosity of crude oil can vary greatly with composition and temperature[2]. Equation (18c) represents a fairly viscous crude and is probably an overestimate for most SPR crude oils.

$1.1 \times 1.2 \left(\frac{90}{100}\right)^{.85} = 1.09$ $\times\ 1.2$ =

$1.1 \times 1 \left(\frac{60}{100}\right)^{.85} = .71$

$50 \times \left(\frac{40}{100}\right)^{1.218} = 16.379$

INPUT VARIABLES AND OPERATING PROCEDURE

PIPWELL is designed to operate interactively with the user. The first question it asks is whether the user wishes to enter data by hand from the keyboard or from a previously created data file which is entered on input unit number 7.

If the user types in "5" the code will interrogate the user for the input data. If the user types in "7", all the remaining data will be read from Tape 7.

If the user types "5", the code responds with a short tutorial on available options and asks for the values of IFW, ITAR, IPIT and IVIS. IFW and ITAR are integer option selection indices which are set according to the following table.

IFW = 0
pipe line
DI2 = pipe DIA

Table 1. Option Selection Table

IFW	ITAR	#/Option	
1	0	1	Oil fill
2	0	2	Oil withdrawal
1	30	3	Reverse leach
2	30	4	Direct leach
3	0	5	Oil withdrawal with brine
1	40	6	Leach-fill

IPIT Determines whether the pressure will be calculated from the flow rates (IPIT=0) or vice versa (IPIT=1)

IVIS Chooses the viscosity selection:

IVIS=0 Gives default calculation (see Equations (10))

IVIS=1 User will specify viscosities

After echoing the users reply, the code asks for values of:

DI1 = Inner diameter of the tubing (inches)
DO1 = Outer diameter of the tubing (inches)
D12 = Inner diameter of the next casing (inches)
Q1 = Flow rate in the annulus (BPD)
Q4 = Flow rate in the tubing (BPD)

so = Specific gravity of oil
SB = Specific gravity of cavern brine
SW = Specific gravity of raw water

TO. = Oil temperature (°F)
TB = Brine temperature (°F)
Tw = Raw water temperature (°F)

H = Casing seat depth (feet)
HH = Tubing depth (feet)
HO = Height of oil in the cavern (feet) (from the oil-brine interface to the cavern roof)
H1 = Depth to the cavern roof (feet)
H2 = Depth of the hanging string surrounding the tubing (feet)

P1 = Annulus wellhead pressure (psi)
P4 = Tubing wellhead pressure (psi).

Note: Unless IPIT=1 only one of the pressures P1 or P4 will be known and required. If the same known value is entered into both variables, the one that is not needed will be ignored.

After this data has been read, the code will ask for the values of:

CL = Inner tubing coupling length (inches)

DC! = Inner tubing coupling diameter (inches)

PSL = Inner tubing section length (feet) (usually either 30 or 40 ft).

If IVIS is l.the.code will ask for:

VISO = viscosity of oil NU1

VISB = viscosity of brine NU4

VISW = viscosity of water.

If the leach fill mode has been selected (ITAR=40) the code will ask for:

DO2 = The outer diameter of the hanging string (inches)

D13 = The inside diameter of the outer casing

CL0 = The hanging string coupling length (inches)

DCO = The hanging string coupling diameter (inches)

PSLO = The hanging string section length (feet).

All of the above data entries are made with free format, list directed read statements. The values are typed in sequentially, as requested by the code, and separated by any delimiter (such as a blank space or a comma). If the values defined in a previous run are still valid for the present run successive commas will leave them unchanged. If all values for a particular read request are unchanged merely type "1" which will leave all values after the last data entry unchanged and will terminate the entry request.

An example of an oil fill calculation dialogue is shown in Figure 7a. The data following the question mark prompts are entered by the user. The input data are echoed by the code so that the user can check that the right values were entered. Figure 7b shows the output data which follows. The pressures at the oil well head P1, the bottom of the hanging string P2, the bottom of the tubing P3 and the tubing wellhead P1 are all listed and labeled.

The flow pressure drops in the annulus and tubing, the average fluid velocities, the casing seat pressure (in this case the same as P2) are also listed. The erosion velocities for oil and brine and the allowed casing seat pressure are printed as informational notes

```
RUN

 82/07/29. 13.10.51.
PROGRAM   WELS

 READ INPUT FILE NUMBER, 5=KEYBOARD ,   7=DATA FILE
3 5
 FOR OIL FILL SET IFU TO 1 AND ITAR=0
 FOR OIL UITHDRAUAL SET IFW=2 AND ITAR=0
 FOR OIL WITHDRAWAL UITH BRINE REPLACEMENT SET IFW=3 AND ITAR=0
 FOR DIRECT LEACH SET IFW=2 AND ITAR=30
 FOR REVERSE LEACH SET IFW=1 AND ITAR=30
 FOR LEACH-FILL SET IFW=1 AND ITAR=40
 IPfT-0 SOLVES FOR PRESSURE, 1 FINDS Q FOR KNOWN PRESSURE
 IVIS=0 FOR DEFAULT VISCOSITIES, =1 WHEN YOU SUPPLY THEM
READ IFW,ITAR,IPIT,IVIS
? 1 0 0 0
 IFU= 1     ITAR= 0     IPIT= 0  IVIS=    0     IOP=    1
READ DI1,DO1,DI2,Q1,Q4,SO,SB,SW,TO,TB,TW,H,HH,HO,H1,H2,P1,P4
? 10.0,10.75,13.0,100000.,100000.,0.86,1.2,1.01 70.,110.,70.0
? 1900.,4000.,500.,2000.,1900.,50.,50.
 FOR INNER TUBING
READ COUPLING LENGTH, AND DIA. (INCHES), AND SECTION LENGTH (FT)
? 10.0 11.25,30.0

 INPUT DATA
 DI1=   10.000  DO1=  10.758  DI2=   13.000  Q1=  100000.0  Q4=  100000.0
 H=     .860 SB=  1.200  SW= 1.010  TO=     70.00  TB=   110.00   TW=    70.00
 H1=  1900.00  HH=   4000.00   HO=    500.00
      2000.00  H2=   1900.00     P1=     50.00   P4=     50.00 PSI
 COUPLING  L= 10.000  D= 11.250   SECTION L=   30.00

 NU1=   25.298     NU4=    1.007     RE1=    15350.33     RE4=   915617.92
```

FIGURE 7a INTERACTIVE DIALOGUE FOR AN OIL FILL EXAHPLE

```
OUTPUT DATA

OIL   WELLHEAD PRESSURE P1=   1467.59 PSI
P2=   1204.31      P3=   2283.14 PSI
BRINE WELLHEAD PRESSURE P4=      se.00 PSI
DYNAMIC PRESSURE DROP IN ANNULUS=   970.80 IN TUBING=    78.74 PSI
OIL   VELOCITY=     22.31     BRINE VELOCITY=     11.92
CASING SEAT PRESSURE*   1204.31 PSI
EROSION VELOCITIES     OIL=     27.32     BRINE=     23.13
DELP=   -368 .      CAPB=  -.1050E-06     CAPO=  -.1050E-06

MAX CASING POINT PRESSURE ALLOWED*    1528.88 =0.8*H


READ INPUT FILE NUMBER, 5=KEYBOARD ,   7=DATA FILE
?
```

FIGURE 7b COMPUTER OUTPUT FOR AN OIL FILL EXAMPLE

for comparison purposes. Three quantities labeled DELP, CAPB and CAPO are printed. These quantities are used to model the well in another code, PIPNET, and will not be discussed in this report. When not using PIPNET this output should be ignored.

For the values chosen in this example, it is seen from Figure 7b that the oil well head pressure is 1467.6 psi. The user may decide that since his oil pump can only pump at 750 psi the flow rate he entered was too high. If he wished to know what flow rate would yield an oil wellhead pressure of 750 psi, he would rerun the code as shown in Figure 8. The option selection change of IPIT from 0 to 1 and the new value for P1 of 750 psi are all that is needed. The output of the rerun now also contains new values of Q1 and Q4 of 52747 BPD which is the flow that matches the prescribed oil wellhead pressure of 750 psi. At the end of each output, the code cycles back to the first question to allow the user to make reruns.

Figure 9a and 9b shows an example of running from a data file prepared in advance as TAPE7. The contents of TAPE7 are shown at the top of Figure 9a and correspond to data for a leach-fill case in which the user will specify the fluid viscosities. The user responds to the first question with, 7, and the code does the remaining print-out. The first INPUT-OUTPUT DATA set corresponds to the oil annulus and brine string, and the second set corresponds to the raw water annulus and brine string.

```
S
 FOR OIL FILL SET IFU TO 1 AND ITAR=0
 FOR OIL WITHDRAWAL SET IFU=2 AND ITAR=0
 FOR OIL UIMDRAUAL WITH BRINE REPLACEMENT SET IFU=3 AN9 ITAR=0
 FOR DIRECT LEACH SET IFU=2 AND ITAR=30
 FOR REVERSE LEACH SET IFU=1 AND ITAR=30
 FOR LEACM-FILL SET IFU-1 ND ITAR=40
 IPIT=0 SOLVES FOR PRESSURE, 1 FINDS 0 FOR KNOWN PRESSURE
 IVIS=0 FOR DEFAULT VISCOSITIES, =1 WHEN YOU SUPPLY THEM
READ IFU,ITAR,IPIT,IVIS
? 1 0 1 0
 IFU=  1     ITAR=  0     IPIT=  1  IVIS=    0     IOP=    1
READ DI1,DO1,DI2,Q1,Q4,SO,SB,SW,TO,TB,TW,H,HH,HO,H1,H2,P1,P4
? 10.0,,,,,,,,,,,,,,,,,,750.0,,
 FOR INNER TUBING
READ COUPLING LENGTH, AND DIA. (INCHES), AND SECTION LENGTH (FT)
? /

 INPUT DATA
 DI1=   10.000  DO1=   10.750  DI2=   13.000  Q1=  100000.0  Q4=  100000.0
 SO=    .860 SD=  1.200 SW=  1.010   TO=   70.00  TB=   110.00  TW=    70.00
 H=   1900.00  HH=   4000.00  HO=    500.00
 H1=   2000.00  H2=   1900.00     P1=    750.00   P4=     50.00 PSI
 COUPLING L=  10.000  D=  11.250   SECTION L=   30.00


 OUTPUT DATA

 OIL WELLHEAD PRESSURE P I -    750.47 PSI
 P2= 1148.39..    P3=     2151.52  PSI
 BRINE WELLHEAD PRESS& P4=     50.00 PSI
 DYNAMIC PRESSURE DROP IN ANNULUS=   399.29 IN TUBING=    23.12 PSI
 OIL   VELOCITY=     1.77     BRINE VELOCITY=      6.29
 CASING SEAT PRESSURE=. 1148.70 PSI
 EROSION VELOCITIES     OIL*     27.32     BRINE=     23.13
 Q1=    52747.88     Q4=    52747.88
 DELP=   -368.05     CAPB=  -.1195E-06    CAPO=   -.1195E-06

 MAX CASING POINT PRESSURE ALLOWED=   1520.000  o.mM


 READ INPUT FILE NUMBER, 5=KEYBOARD ,   7=DATA FILE
?
```

FIGURE 8 A SAMPLE RERUN OF AN OIL FILL EXAMPLE

```
LIST,FN=TAPE7

 82/07/29. 13.45.49.
PROGRAM   TAPE7

1,40,0,1
8.00,8.635,12.75,30000.,100000.,0.86,1.2,1.01,70.,90.,70.,2100.,4300.,200.
2300.,2500.,50.,50.00
10.0,9.25,40.0
13.0,1.3,1.0
13.25,15.000,10.0,13.75,40.0
READY.
RA

READY.
RUN

 82/07/29. 13.46.01.
PROGRAM   WELS

 READ INPUT FILE NUMBER,  5=KEYBOARD  ,   7=DATA FILE
? 7
 FOR OIL FILL SET IFW TO 1 AND  ITAR=0
 FOR OIL WITHDRAWAL SET IFW=2 AND ITAR=0
 FOR OIL WITHDRAWAL WITH BRINE REPLACEMENT SET IFW=3 AND ITAR=0
 FOR DIRECT LEACH SET IFW=2 AND ITAR=30
 FOR REVERSE LEACH SET IFW=1 AND ITAR=30
 FOR LEACH-FILL SET IFW=1 AND ITAR=40
 IPIT=0 SOLVES FOR PRESSURE, 1 FINDS Q FOR KNOWN PRESSURE
 IVIS=0 FOR DEFAULT VISCOSITIES, =1 WHEN YOU SUPPLY THEM
READ IFW,ITAR,IPIT,IVIS
 IFW=  1      ITAR= 40      IPIT=  0  IVIS=     1      IOP=     6
READ DI1,DO1,DI2,Q1,Q4,SO,SB,SW,TO,TB,TW,H,HH,HO,H1,H2,P1,P4
 Q1 IS THE OIL FILL RATE, Q4 THE BRINE PRODUCTION (BPD)
 FOR INNER TUBING
READ COUPLING LENGTH, AND DIA. (INCHES), AND SECTION LENGTH (FT)
READ VISO,VISB,VISW
READ DO2,DI3,CLO,DCO (ALL IN INCHES), PSLO IN FEET
 CLO = COUPLING LENGTH, DCO=COUPLING DIA, PSLO=SECTION LENGTH

 INPUT DATA
 DI1=    8.000  DO1=    8.635  DI2=   12.750  Q1=   30000.0  Q4=  100000.0
 SO=   .860 SB=  1.200 SW=  1.010  TO=    70.00  TB=    90.00  TW=    70.00
 H=   2100.00  HH=   4300.00  HO=    200.00
 H1=   2300.00  H2=   2100.00    P1=     50.00   P4=     50.00 PSI
 DO2=   13.250     DI3=   15.000
 COUPLING L=  10.000  D=  13.750   SECTION L=   40.00

 MU1=   13.000     MU4=    1.300     RE1=     7531.65     RE4=   886538.46

 OUTPUT DATA

 OIL   WELLHEAD PRESSURE P1=    855.09 PSI
 P2=   1466.94      P3=   2551.17 PSI
 BRINE WELLHEAD PRESSURE P4=     50.00 PSI
 DYNAMIC PRESSURE DROP IN ANNULUS=   170.15  IN TUBING=   266.89 PSI
 OIL   VELOCITY=      7.23     BRINE VELOCITY=     18.63
```

FIGURE 9a LEACH-FILL EXAMPLE RUN FROM A DATA FILE

```
CASING SEAT PRESSURE=   1466.94 PSI
EROSION VELOCITIES      OIL=     27.32      BRINE=      23.13
DELP=   -368.05     CAPB=  -.4370E-07      CAPO=  -.4856E-06

MAX CASING POINT PRESSURE ALLOWED=   1680.00 ●  ..8tW


INPUT DATA
DI1=    8.000  DO1=    8.635  DI2=   12.750  Q1= 7aee.e  Q4=  100000.0
SO=  1.010  SB= 1.200  SW= 1.010  TO=    70.00  TB=    90.00  TW=    70.00
H=   2100.00  HH=   4300.00  HO=    200.00
H1=   2300.00  H2=   2500.00     P1=    855.09   P4=     50.00 PSI
COUPLING  L= 10.000  D=  9.250   SECTION L=   40.00

MU1=    1.666    MU4=    1.366    RE1=   310854.34     RE4=   886538.46

OUTPUT DATA

WATER WELLHEAD PRESSURE P1=    617.43 PSI
P2=   1615.89      P3=   2551.17 PSI
BRINE WELLHEAD PRESSURE P4=     50.00 PSI
DYNAMICPRESSUREDROP IN ANNULUS=    94.87 IN TUBING=   a66.89 PSI
WATER VELOCITY=      9.77     BRINE VELOCITY=     16.63
CASING SEAT PRESSURE=   1466.94 PSI
EROSION VELOCITIES      OIL=     27.32      BRINE=      23.13
DELP=   -205.68     CAPB=  -.3618E-07    CAPO=   -.6959E-07

MAX CASING POINT PRESSURE ALLOWED=    1680.66 ●   0.8tW .


READ INPUT FILE NUMBER, 5=KEYBOARD ,   7=DATA FILE
?
```

FIGURE 9b A LEACH-FILL EXAMPLE (Continued)

On the Sandia NOS system the code PIPWEL may be accessed and executed by the following commands:

```
FTNTS
GET,WELS/UN=AJRUSSO
RUN
```

The code should respond as shown in Figure 7 through 9.

primary, wels

For simple pipe flow
IFW = 2 ITAR = 30 IPIT = 0 IVIS = 0
DO1 = 0 DC = 0

SUMMARY

The computer program PIPWEL has been developed to calculate the wellhead and casing seat pressures in SPR cavern wells. The options available are oil fill, oil withdrawal (with water or brine replacement), direct leach, reverse leach and leach-fill. For the first five of these options, the user may choose to specify the wellhead pressures and PIPWEL will calculate the resulting flow rates. For any option the user may enter all the fluid viscosities or accept a code default calculation. Data entry to PIPWEL may be interactive or from a previously prepared data file. PIPWEL is currently active on the Sandia NOS system.

REFERENCES

1. R. P. Benedict, Fundamentals of Pipe Flow, John Wiley & Sons, NY, 1980.

2. Flow of Fluids Through Values, Fittings and Pipe, Crane Co. Technical Paper 410, 1969.

INPUT DATA

DI1= 6.000 DO1= 7.000 DI2= 13.000 Ql= 100000.0 Q4= 100000 .0

so= .860 SB= 1.200 SW= 1.000 TO= 100.00 TB= 80.00 TW= 80.00

H= 2500.00 HH= 4800 . 00 HO= 2000.00

H1= 2700.00 H2= 3500 . 00 Pl= 800.00 P4= 800.00 PSI

COUPLING L= 7.000 D= 8.000 SECTION L= 40.00

NU1= 55,000 NU4= 1.300 REl= 8381.82 RE4= 1182051.28

OUTPUT DATA

OIL WELLHEAD PRESSURE Pl= 800 .00 PSI

P2= 2240.30 P3= 2739.12 PSI

WATER WELLHEAD PRESSURE P4= 1739.38 PSI

DYNAMIC PRESSURE DROP IN ANNULUS= 136.97 IN TUBING= 1078.67 PSI

OIL VELOCITY= 9.93 WATER VELOCITY= 33.11

CASING SEAT PRESSURE= 2240.30 PSI

EROSION VELOCITIES OIL= 27.32 BRINE= 23.13

DELP= -276.25 CAPB= .1216E-06 CAPO= .1216E-06

MAX CASING POINT PRESSJJRE ALLOWED= 2000.00 =0.8*H

IFW = 2 ITAR = 0 IPIT = 0 IWC = 1 IOP = 2

INPUT DATA

DI1= 6 '000 DO1= 7.000 DI2= 13.000 Q1= 100000.0 Q4= 100000 .0
SO= .860 SB= 1.200 SW= 1.000 TO= 100 .00 TB= 80.00 TW= 80.00
H= 2500.00 HH= 4800.00 HO= 2000.00
H1= 2700.00 H2= 3500.00 P1= 800.00 P4= 800 .00 PSI
COUPLING L= 7.000 D= 8.000 SECTION L= 40.00

NU1= 16.379 NU4= .861 RE1= 28146.33 RE4= 1733959 . 18

OUTPUT DATA

OIL WELLHEAD PRESSURE P1= 300.00 PSI
P2= 2207.16 P3= 2705.97 PSI
WATER WELLHEAD PRESSURE P4= 1691.08 PSI
DYNAMIC PRESSURE DROP IN ANNULUS= 103.83 IN TUBING= 1063.50 PSI
OIL VELOCITY= 9.93 WATER VELOCITY= 33.11
CASING SEAT PRESSURE= 2207.16 PSI
EROSION VELOCITIES OIL= 27.32 BRINE= 23.13
DELP= -276.25 CAPB= .1167E-06 CAPO= .1167E-06

MAX CASING POI NT PRESSURE ALLOWED= 2000.00 =0 .8*H

IFW=2 IA=0 IPIT=0 [illegible]

2, 30, 0, 0

INPUT DATA

DI1= 3.000 DO1= 0.000 DI2= 3.000 Q1= 7500.0 Q4= 7500.0
SO= .860 SB= 1.200 SW= 1.200 TO= 80.00 TB= 80.00 TW= 80.00
H= 20.00 HH= 50.00 HO= 20.00
H1= 25.00 H2= 50.00 P1= 800.00 P4= 800.00 PSI
COUPLING L= 4.000 D= 0.000 SECTION L= 30.00

NUl= 1.320 NU4= 1.034 RE1= 174621.21 RE4= 222994.90

$1.1 \times 1.2 \left(\frac{80}{80}\right)^{.85}$ $1.1 \times 1.2 \left(\frac{60}{80}\right)^{.85}$ $174621 \times \frac{1.32}{1.1} =$ [illegible]

OUTPUT DATA

BRINE WELLHEAD PRESSURE Pl= 800.00 PSI
P2= 829.03 P3= 829.03 PSI
WATER WELLHEAD PRESSURE P4= 806.04 PSI
DYNAMIC PRESSURE DROP IN ANNULUS= 3.05 IN TUBING= 2.39 PSI
BRINE VELOCITY= 9.93 WATER VELOCITY= 9.33
CASING SEAT PRESSURE= 817.12 PSI
EROSION VELOCITIES OIL= 27 .32 BR I NE= 23.13
DELP= 0.00 CAPB= .1074E-06 CAPO= .1074E-06

MAX CASING POINT PRESSURE ALLOWED= 16.00 =0.8*H

IFW = 2
ITAR = 30
IPIT = 0
IVIS = 0

NOT USED

DI 1 = 3
DO 1 = 0 ☆ 0
DI2 = 3
Q 1 = 7500
Q 4 = 7500
SO = .86 ☆ -
SB = 1.2
SW = 1.2
TO = 80 ☆ -
TB = 80
TW = 80
H = 1000 ☆ 20
HH = 50
HO = 500 ☆ 20
H1 = 1000 ☆ 25
H2 = 50
P1 = 800 ☆ -
P4 = 800
CL = 4 ☆ -
DC = 3.5 ☆ -0
PSL = 30 ☆ -
VISO = — ☆
VISB = — ☆
VISW = — ☆

PDP
BPD = 7500
ID = 3
95% SAT 1.9 centipoise — VIS = 1.32
PR = .00018
SG = 1.2
LE = 50
psi = 2.628
FF = .0165
RN = 174621
V = 9.9

$$\frac{Dvp}{\mu} \qquad v = \frac{Q}{A}$$

$$v = \frac{\frac{1\times10^6\ \text{BBL}}{\text{day}}\ \frac{42\text{gal}}{\text{bbl}}\ \frac{\text{ft}^3}{2.48\text{gal}}\ \frac{1\text{day}}{(24)(}}{\frac{\pi(3)^2}{4}}$$

$$v = 9.1939\ \text{ft/sec}$$

$$Re = \frac{(3)(\text{ft})(9.1939\ \text{ft/sec})(62.4)(1.2)}{\left(6.72\times10^{-4}\ \frac{\#m}{\text{ft sec}}\right)(1.32)}$$

$$= 2.32\times10^{6}$$

.001
1.4882

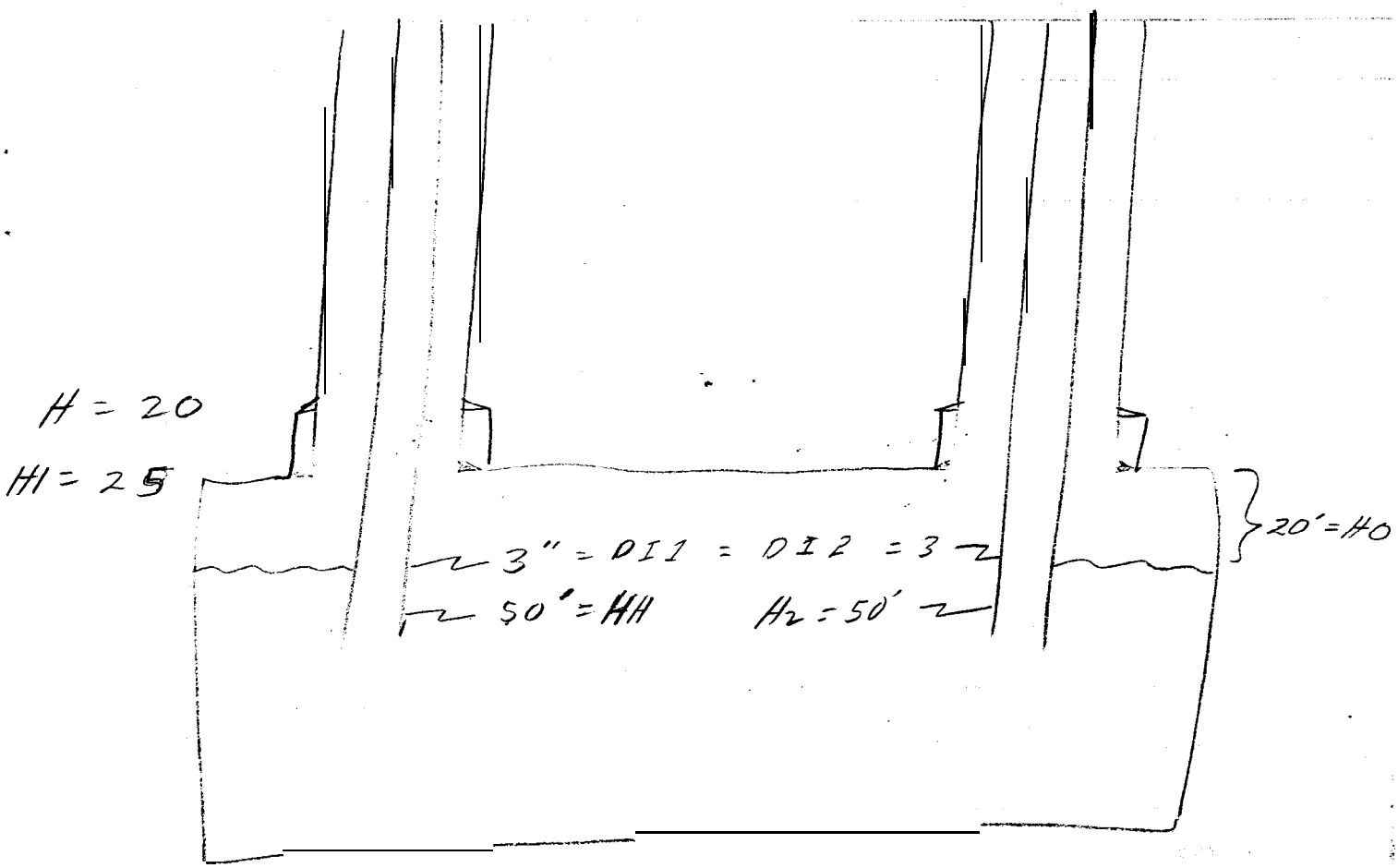
H = 20
H1 = 25
3" = DI1 = DI2 = 3
50' = HH
H2 = 50'
20' = H0

```
LIST
00100  PROGRAM PIPWEL(INPUT,OUTPUT,TAPE5= INPUT, TAPE7)
00105C*****************************************************************
00110C                ISSUED BY SANDIA NATIONAL LABORATORIES,
00115C                        A PRIMECONTRACTOR TO THE
00120C                   UNITED STATES DEPARTMENT OF ENERGY
00125C***************************NOTICE*************************************
00130C    THIS REPORT WAS PREPARED AS AN ACCOUNT OF WORK SPONSORED BY THE
00135C    UN I TED STATES GOVERNMENT.  NEITHER THE UNITED STATES NOR THE
00140C    {UNITED STATES DEPARTMENT OF ENERGY, NOR ANY OF THEIR EMPLOYEES,
00145c    NOR ANY OF THEIRCONTRACTORS , SUBCONTRACTORS, OR THEIR EMPLOYEES,
00150C    MAKES ANY WARRANTY, EXPRESS OR IMPLIED, OR ASSUMES ANY LEGAL
00155C    LIABILITY OR RESPCINSIBILITY FOR THE ACCURACY,COMPLETENESS OR
00160C    USEFULNESS OF ANY INFORMATION, APPARATUS, PRODUCT OR PROCESS
00165C    DISCLOSED, OR REPRESENTS THAT ITS USE WOULD NOT INFRINGE PRIVATELY
00170C    OWNED RIGHTS,
00175C*****************************************************************
00180
00185 DIMENSION NAMEO(7),NAMEB(7)
00190  COMMON /WELP/ H,HH,H1,H2,HO,HB,P1,P2,P3,P4,VB,VO,EVB,EVO,PSMB,
00195+  PSMO,PBAD,DPPO,DPPB,P1ST,P4ST,IPIT,DO2,DI3,CL,DC,PSL,
00200+CLO,DCO,PSLO
00205+  ,SW,VISO,VISB,VISW,IVIS,IOP,TW,PCS,SOS
00210 DATA NAMEB/5HBRINE,5HWATER,5HBRINE,5HWATER,3*5HBRINE/
00215 DATA NAMEO/3HOIL,3HOIL,5HWATER,5HBRINE,3*3HOIL/
00220  P2=P3=VO=VB=PSMB=PSMO=PBAD=PMAXC=EVO=EVB=0.0
00225 1 PRINT 2
00230 2 FORMAT (1H ,*READ INPUT FILE NUMBER, 5=KEYBOARD ,  7=DATA FILE*)
00235 READ (5, *) NU
00240 IF(EOF(5))  7
00245 4 CONTINUE
00250C    READ IFW = 0 GIVES PIPLINE, =1 FILL.. 2 WITHDRAWAL, 3 WITHDRAW
00255C    WITH BRINE REPLACEMENT? FOR L-F SET IFW=1 AND ITAR=40
00260 PRINT 3
00265 3 FORMAT(1H ,*FOR OIL FILL SET IFW TO 1 AND  ITAR=0                *,
00270+ /,* FOR OIL WITHDRAWAL SET IFW=2 AND ITAR=0       */,
00275+ * FOR OIL WITHDRAWAL WITH BRINE REPLACEMENT SET IFW=3 AND ITAR=0 */,
00280+ * FOR DIRECT LEACH SET IFW=2 AND ITAR=30*/,
00285+ * FUR REVERSE LEACH SET IFW=1 AND ITAR=30*/,
00290+ * FOR LEACH-FILL SET IFW=1 AND ITAR=40 */,
00295+ * IPIT=0 SOLVES FOR PRESSURE, 1 FINDS Q FOR KNOWN PRESSURE*/,
00300+ * IVIS=0 FOR DEFAULT VISCOSITIES, =1 WHEN YOU SUPPLY THEM* )
00305C    IPIT=1 MEANS THE FLOW RATE WILL BE ITERATED TO GIVE PI AND p4
00310 IOP=2
00315 PRINT 5
00320 READ (NU,*) IFW,ITAR,IPIT,IVIS
00325 5 FORMAT( *READ IFW,ITAR,IPIT,IVIS*)
00330 IF(EOF(NU)) 7  7  7  ,7,
00335 7 CONTINUE
00337 ITARS=ITAR
00340 IF( IFW .EQ .2 ) IOP=2
00345 IF(IFW.EQ.1) IOP=1,
00350 IF(ITAR.EQ.30) IOP=IFW+2
00355 IF(IFW.EQ.3) IOP=5
00360 IF(ITAR.EQ.40.AND.IFW.EQ.1) IOP=6
00365 IF(IFW.EQ.0) IOP=7
00370 PRINT 8,IFW,ITAR,IPIT,IVIS,IOP
00375 8 FORMAT(5H IFW=,I3,5X,5HITAR=,I3,5X,5HIPIT=,I3,2X,5HIVIS=,I5,5X,
00380+ 4HIOP=,I5)
00385 PRINT 10
```

```
00390 10 FORMAT(*READ DI1,DO1,DI2,Q1,Q4,SO,SB,SW,TO,TB,TW,H,HH,HO,H1,H2,P1,P4*)
00395C + * SB IS THE SPEC. GRAVITY OF BRINE IN THE CAVERN *)
00397 IF(IOP.EQ.6) PRINT 11
00398 11 FORMAT(* Q1 IS THE OIL FILL RATE, Q4 THE BRINE PRODUCTION (BPD)*)
00400 READ (NU,*) DI1,DO1,DI2,QO,QB,SO,SB,SW,TO,TB,TW,H,HH,HO,H1,H2,P1,P4
00402 QOST=QO
00403 QBST=QB
00405 PRINT 12
00410 12 FORMAT(* FOR INNER TUBING*/,*READ COUPLING LENGTH,*
00415+ * AND DIA. (INCHES), AND SECTION LENGTH (FT)*)
00420 READ(NU,*) CL,DC,PSL
00425 IF(IVIS.EQ.0) GO TO 50
00430 PRINT 40
00435 40 FORMAT(20HREAD VISO,VISB,VISW  )
00440 READ(NU,*) VISO,VISB,VISW
00445 50 CONTINUE
00450 SOS=SO
00455 IF(ITAR.EQ.40) PRINT 15
00460 15 FORMAT(*READ DO2,DI3,CLO,DCO (ALL IN INCHES), PSLO IN FEET*/,
00465+ * CLO = COUPLING LENGTH, DCO=COUPLING DIA, PSLO=SECTION LENGTH* )
00470 IF(ITAR.EQ.40) READ (NU,*) DO2,DI3,CLO,DCO,PSLO
00475 H2S=H2
00480 IF(ITAR.EQ.40) H2=H
00482 P1ST=P1
00483 P4ST=P4
00485 20 CONTINUE
00490 IF(ITAR.GE.30.AND.HO+H1.GT.H2S) PRINT 31
00495 31 FORMAT(* WARNING !!! OIL LEVEL IS BELOW BRINE STRING*)
00496 IF(ITAR.EQ.40.AND.QO.EQ.QB) PRINT 33
00497 33 FORMAT(* WARNING!!! QO=QB LEACH FLOW IS 0 *)
00505  PRINT 90
00510  90 FORMAT(/,11H INPUT DATA )
00515  P R I N T  100,DI1,DO1,DI2,QO,QB,SO,SB,SW,TO,TB,TW,H,HH,HO,H1,H2,P1,P4
00520  100 FORMAT(5H DI1=,F9.3,2X,4HDO1=,F9.3,2X,4HDI2=,F9.3,2X,3HQ1=,F10.1,
00525+  2X,3HQ4=,F10.1,/,4H SO=,F7.3,4H SB=,F7.3,4H SW=,F7.3,5H TO=,F9.2,2X,
00530+ 3HTB=,F9.2,2X,3HTW=,F9.2,/,3H H=,F10.2,2X,3HHH=,F10.2,2X,3HHO=,F10.2,/,
00535+ 4H H1=,F10.2,2X,3HH2=,F10.2,5X,3HP1=,F10.2,3X,3HP4=,F10.2,4H PSI )
00540 IF(ITAR.EQ.40) PRINT 101, DO2,DI3
00545 101 FORMAT(5H DO2=,F9.3,5X,4HDI3=,F9.3)
00550 IF(ITAR.NE.40) PRINT 102,CL,DC,PSL
00555 IF(ITAR.EQ.40) PRINT 102,CLO,DCO,PSLO
00560 102 FORMAT(* COUPLING L=*,F8.3,2X,2HD=,F8.3,*   SECTION L=*F8.2)
00565 IF(IOP.EQ.4) SO=SB
00570 IF(IOP.EQ.3) SO=SW
00575 CALL WELL(QO,QB,DI1,DO1,DI2,SB,SO,TB,TO,IFW,ITAR)
00580 PRINT 105
00585 105 FORMAT(//,12H OUTPUT DATA,/)
00610 IF(IFW.EQ.0) GO TO 119
00615  P R I N T  112,NAMEO(IOP),P1
00620 112 FORMAT(1H ,A5,22H WELLHEAD PRESSURE P1=,F10.2,4H PSI)
00625  PRINT 113,P2,P3
00630 113 FORMAT(4H P2=,F10.2,5X,4H P3=,F10.2,4H PSI)
00635 PRINT 114,NAMEB(IOP),P4
00640 114 FORMAT(1H ,A5,22H WELLHEAD PRESSURE P4=,F10.2,4H PSI)
00645 PRINT 116,DPPO,DPPB
00650 116 FORMAT(34H DYNAMIC PRESSURE DROP IN ANNULUS=,F9.2,
00655+ 12H  IN TUBING= ,F9.2,4H PSI)
00660 PRINT 115,NAMEO(IOP),VO,NAMEB(IOP),VB
00665 115 FORMAT(1H ,A5,10H VELOCITY=,F10.2,5X,A5,10H VELOCITY=,F10.2)
00670C PRINT 116,NAMEB(IOP),PSMB,NAMEO(IOP),PSMO
```

```
00675C 116 FORMAT(25H MAXIMUM SURGE PRESSURE  ,A5,1H=,F10.2,5X,A5,
00680C+ 1H=,F10.2)
00685 PRINT 121,PCS
00690 121 FORMAT(22H CASING SEAT PRESSURE= ,F10.2,4H PSI )
00695C PRINT 117, PBAD
00700C 117 FORMAT(30H MAXIMUM CASING SEAT PRESSURE= ,F10.2,4H PSI)
00705 119 CONTINUE
00710 PMAXC=0.80*H
00715  PRINT 120, EVO,EVB
00720  120 FORMAT(19H EROSION VELOCITIES  ,5X,4HOIL=,F10.2,5X,6HBRINE=,F10.2)
00725 IF(IPIT.NE.0) PRINT 140,QO,QB
00730 140 FORMAT(4H Q1=,F12.2,5X,3HQ4=,F12.2)
00735C DELP AND CAPO OR CAPB ARE PIPSPR WELL MODELING PARAMETERS
00740 IF(IFW.EQ.0) GO TO 300
00745 HDUM=HO+H1
00750 DELP=0.433*(SO-SB)*HDUM
00755 IF(IFW.EQ.2) DELP=0.433*(SO*HDUM+SB*HB-SW*HH)
00760 DELPN=P4-P1
00765 CAPO=(DELPN-DELP)/(QO*QO+1.0E-10)
00770 CAPB=(DELPN-DELP)/(QB*QB+1.0E-10)
00775 PRINT 200,DELP,CAPB,CAPO
00780 200 FORMAT(6H DELP=,F10.2,5X,5HCAPB=,E12.4,5X,5HCAPO=,E12.4,/)
00785  PRINT 125, PMAXC
00790  125 FORMAT(35H MAX CASING POINT PRESSURE ALLOWED= ,F10.2,
00795+ 8H =0.8*H ,//// )
00800 IF(ITAR.EQ.40.AND.IFW.EQ.1) GO TO 700
00805 GO TO 400
00810 300 PRINT 310, DPPO,DPPB,VO,VB
00815 310 FORMAT(32H PIPELINE PRESSURE DROP FOR OIL= ,F10.2,5X,10HFOR BRINE=
00820+ ,F10.2,9H PSI/MILE,/,14H OIL VELOCITY=,F9.2,5X,15HBRINE VELOCITY=,
00825+ F9.2,5H FT/S )
00830 400 CONTINUE
00831 ITAR=ITARS
00832 QO=QOST
00833 SO=SOS
00834 P1=P1ST
00835 P4=P4ST
00836 QB=QBST
00837 REWIND 7
00838 GO TO 1
00840 700 CONTINUE
00845 ITAR=30
00850 IOP=3
00855 QO=(QB-QO)*1.03
00860 H2=H2S   $ SO=SW
00865 GO TO 20
00870  777 CONTINUE
00875 STOP
00880 END
00885 SUBROUTINE WELL(QO,QB,DI1,DO1,DI2,SB,SO,TB,TO,IFW,ITAR)
00890 COMMON /WELP/ H,HH,H1,H2,HO,HB,P1,P2,P3,P4,VB,VO,EVB,EVO,PSMB,
00895+ PSMO,PBAD,DPPO,DPPB,P1ST,P4ST,IPIT,DO2,DI3,CL,DC,PSL,
00900+ CLO,DCO,PSLO
00905+ ,SW,VISO,VISB,VISW,IVIS,IOP,TW,PCS,SOS
00910 IF(IOP.EQ.4) SO=SB
00915          G=32.2
00920 DPPO=DPPB=0 .0
00925  AMUO=50.0*(40.0/TO)**1.218
00930 IF(ITAR.GE.30) GO TO 2
00935 IF(ITAR.GE.1) AMUO=0 .301*EXP(172.7/((TO-32.0)/1.8))*FLOAT( ITAR)
```

```
00940 2 CONTINUE
00945  AMUB=1.1*SB*(80.0/TB)**0.85
00950 IF(IFW.EQ.2) AMUB=1.1*SW*(60.0/TW)**0.85
00955 IF(ITAR.EQ.30.AND.IFW.EQ.1) AMUO=1.1*SW*(60.0/TW)**0.85
00960 IF(ITAR.EQ.30.AND.IFW.EQ.2) AMUO=1.1*SB*(80./TB)**0.85
00965 DE=((DI2-DO1)**3*(DI2+DO1)**2)**0.2
00970 DEC=DI2-DC
00975 DEP=DI2-DO1
00980 IF(ITAR.EQ.40) DEC=DI3-DCO
00985 IF(ITAR.EQ.40) DEP=DI3-DO2
00990 IF(ITAR.EQ.40) DE=((DI3-DO2)**3*(DI3+DO2)**2)**0.2
00995 IF(IVIS.LT.1) GO TO 4
01000 AMUO=VISO
01005 AMUB=VISB
01010 IF(IOP.EQ.3) AMUO=VISW
01015 IF(IOP.EQ.4) AMUO=VISB
01020 IF(IOP.EQ.4) AMUB=VISW
01025 4 CONTINUE
01030 IT=0
01035 3 CONTINUE
01040 AAN=DI2**2-DO1**2
01045 AANC=DI2**2-DC**2
01050 IF(ITAR.EQ.40) AAN=DI3**2-DO2**2
01055 IF(ITAR.EQ.40) AANC=DI3**2-DCO**2
01060  REO=92.2*DEP*QO/(AMUO*AAN)
01065 REC=92.2*DEC*QO/(AMUO*AANC)
01070  EPS=0.0016
01075C     SET IFW=0 FOR PIPELINE CHLCULATIONS
01080  IF(IFW.EQ.0) GO TO 500
01085  REB=92.2*QB/(DI1*AMUB)
01090 IF(IPIT.EQ.0) PRINT 5,AMUO,AMUB,REO,REB
01095 5 FORMAT(/,5H NU1= ,F9.3,5X,4HNU4=,F9.3,5X,4HRE1=,F12.2,5X,
     01100+ 4HRE4=,F12.2)
01105  FB=FO=0.01
01110 FC=0.01
01115  10 FBS=FB
01120  FOS=FO
01125 FCS=FC
01130  FB=1.0/(4.0*ALOG10(EPS/(DI1*3.7)+2.51/(REB*SQRT(FBS)))**2)
01135  FO=1.0/(4.0*ALOG10(EPS/(DEP *3.7)+2.51/(REO*SQRT(FOS)))**2)
01140 FC=1.0/(4.0*ALOG10(EPS/(DEC*3.7)+2.51/(REC*SQRT(FCS)))**2)
01145 IF(ABS(FB-FBS)/FB.GT.0.001) GO TO 10
01150  IF(ABS(FO-FOS)/FO.GT.0.001) GO TO 10
01155  IF(ABS(FC-FCS)/FC.GT.0.001) GO TO 10
91160 IF(REO.LE.3000.0) FO=64.0/REO
01165 IF(REB.LE.3000.0) FB=64.0/REB
01170 IF(REC.LE.3000.0) FC=64.0/REC
01175  DPB=1.1461E-5*FB*SB*QB**2/(DI1**5)
01180  DPO=1.1461E-5*FO*SO*QO**2/(DE**5)
01185 AKC=1.0-AANC/AAN
01190 AKS=0.5*AKC+AKC**2
01195 NPS=INT(H2/PSL)
01200  IF(ITAR.EQ.40)  NPS=INT(H2/PSLO)
01205 AKF=FC*CL/DEC
01210  IF(ITAR.EQ.40)  AKF=FC*CLO/DEC
01215 AKT=FLOAT(NPS)*(AKS+AKF)
01220 DPOC=9.562E-7*AKT*SO*QO**2/AANC**2
01225 DPOT=DPO*H2*(1.0-CL/(12.0*PSL))+DPOC
01230  IF(ITAR.EQ.40)  DPOT=DPO*H2*(1.0-CLO/(12.0*PSLO))+DPOC
01235  HB=HH-H1 -HO $ HD=HH-H1 $ HDUM=H1+HO
```

```
01240C     IFW=? FOR OIL INJECTION , 2 FOR WITHDRAWAL
01245 IF(IFW.EQ.2) GO TO 100
01250 IF(IFW.EQ.3) GO TO 100
01255 P3=P4+0.433*SB*HH+DPB*HH
01260 SV=Sn
01265 IF(IOP.EQ.3) SV=SB
01270  P2=P3-(0.433*SB*HB+0.433*SV*(HO+H1-H2))
01275  P1=P2-0.433*SO*H2+DPOT
01280 PCS=P2-0.433*(SB*(H2-HDUM)+SOS*(HDUM-H))
01285 IF(IOP.EQ.1) PCS=P2
01290 IF(InF.EQ.6) PCS=P2
01295 IF(IPIT.EQ.0) GO TO 90
01300 FAC=(P1ST-P1)/P1ST
01305 IF(ABS(FAC).LT.0.001) GO TO 90
01310 DUM=AMIN1 (ABS(FAC),0.2/FLOAT(IT+1))
01315 FACT=SIGN(DUM,FAC)
01320 QO=QO*(1.0+FACT)
01325 QB=QB*(1,0+FACT)
0 1330 IT=IT+1
0 1335 IF(IT.GT.100)GO T O  80
04340 GO TO 3
01342 80 PRINT 85
01343 85  FORMAT(*  ITERHTICN LIMIT EXCEEDED? SOLUTION INACCURATE*)
01345 90 CONTINUE
01350  XF=DPB*HH
01355  GO Tn 200
01360  100 P2=P1+0.433*SO*H2+DPOT
01365  P3=P2+(0.433*SO*(HO+H1-H2)+0.433*SB*HB)
01370 IF(IFW.EQ.3) GO in 110
01375  DPB=DPB*SW/SB
01380  P4=P3-0.433*SW*HH+DPB*HH
01385 GO TO 120
01390 110 P4=P3-0.433*SB*HH+DPB*HH
01395 120 CONTINUE
01400 PCS=P2-0.433*(SB*(H2-HDUM)+SOS*(HDUM-H))
01405 IF(IOP.EQ.2) PCS=P2
01410 IF(IPIT.EQ.0) GO TO 150
01415 FAC=(P4ST-P4)/P4ST
01420 IF(ABS(FAC).LT.0.001) GO Tn 150
01425 DUM=AMIN1(ABS(FAC),0.2/FLOAT(IDIM(IT,20)+1))
01430 FACT=SIGN(DUM,FAC)
01435 QO=QO*(1.0+FACT)
01440 QB=QB*(1.0+FACT)
01445 IT=IT+1
01450 IF(IT.GT.100) GO Tn 140
01455 GO TO 3
01457 140 PRINT 85
01460 150 CONTINUE
01465  XF=DPOT
01470  200 VB=0.01192*QB/DI1**2
01475  VO=0.01192*QO/(DI2**2-DO1**2)
01480 IF(ITAR.EQ.40)VO=0.01192*QO/(DI3**2-DO2**2)
01485  RHOW=62.3
01490  EVB=200.0/SQRT(RHOW*SB)
01495   EVO=200.0/SQRT(RHOW*SOS)
01500 EK=3.1E5/(1.0+3.1E5*DI1/(3.0E7*(DO1-DI1)))
01505  A=SQRT(144.0*G*EK/(RHOW*SB))
01510  PSMB=0.433*VB*A*SB/G
01515  EK=3.1E5
01520  A=SQRT(144.0*G*EK/(RHOW*SO))
```

```
01525  PSMO=0.433*VO*A*SO/G
01530  X=0.5*XF/PSMO
01535  PBAD=(1.0-TANH(X))*PSMO+PCS
01540 DPPO=DPOT
01545 DPPB=DPB*HH
01550  GO TO 700
01555C     PIPELINE CALCULATIONS
01560 500 EVO=200.0/SQRT(62.3*SOS)
01565 EVB=200.0/SQRT(62.3*SB)
01570  R=0.1190/(DI2*AMUO)*QO
01575  RB=0.1190/(DI2*AMUB)*QB
01580  FO=0.0018+0.0062*(1.0/R)**0.355
01585  FB=0.0018+0.0062*(1.0/RB)**0.355
01590  DPPO=0.241*FO*SO*QO**2*1.1/DI2**5
01595  DPPB=0.241*FB*SB*QB**2*1.1/DI2**5
01600 VB=0.01192*QB/DI2**2
01605 VO=0.01192*QO/(DI2**2)
01610 THICK=0.5
01615 VWO=4720.0*(1.0+214000.0*DI2/(3.0E7*THICK))
01620 PRI=VWO*VO*SO/74.38
01625 PRF=2.0*PRI/VWO
01630C   PRISE=PRF*L(FT)/T(SEC)
01635 AL=67.0     $ T=180.0
01640 X=0.5*DPPO*AL/PRI
01645 PRISE=AMIN1(PRI,PRF*5280.0*AL/T)
01650 PBAD=(1.0-TANH(X))*PRISE
01655 P1=PRI      $ P2=PRISE
01660 PRINT 320
01665 320 FORMAT(/,39H OIL SURGE PRESS RISE= PRF*L(FT)/T(SEC)    )
01670 PRINT 630,PRF
01675 630 FORMAT(5H PRF= ,E12.5 )
01680  700 CONTINUE
01685  RETURN
01690  END
READY.
```

```
FTNTS
READY.
RUN
 READ INPUT FILE NUMBER,  5=KEYBOARD,  7=DATA FILE
? 5
 FOR OIL FILL SET IFW TO 1 AND  ITAR=0
 FOR OIL WITHDRAWAL SET IFW=2 AND ITAR=0
 FOR OIL WITHDRAWAL WITH BRINE REPLACEMENT SET IFW=3 AND ITAR=0
 FOR DIRECT LEACH SET IFW=2 AND ITAR=30
 FOR  REVERSE  LEACH  SET  IFW=1  AND  ITAR=30
 FOR LEACH-FILL SET IFW=1 AND ITAR=40
 IPIT=0 SOLVES FOR PRESSURE,  i FINDS Q FOR KNOWN PRESSURE
 IVIS=0 FOR DEFAULT VISCOSITIES, = 1 WHEN YOU SUPPLY THEM
READ IFW,ITAR,IPIT,IVIS
? 2,0,0,0
 IFW=  2      ITAR=   0      IPIT=    0   IVIS=    0      IOP=     2
READ DI1,DO1,DI2,Q1,Q4,SO,SB,SW,TO,TB,TW,H,HH,HO,H1,H2,P1,P4
? 7.,7.5,10,5000..5010.,.8,1.1,1.,
?
 *TERMINATED*
BYE
UN=JLTODD   LOG OFF   10.00.11.
JSN=AHGG     SRU-S        3.659
CONNECT TIME            0.09.43
```